Full_GaN_Langley_HB_LLC_Module.SchDoc

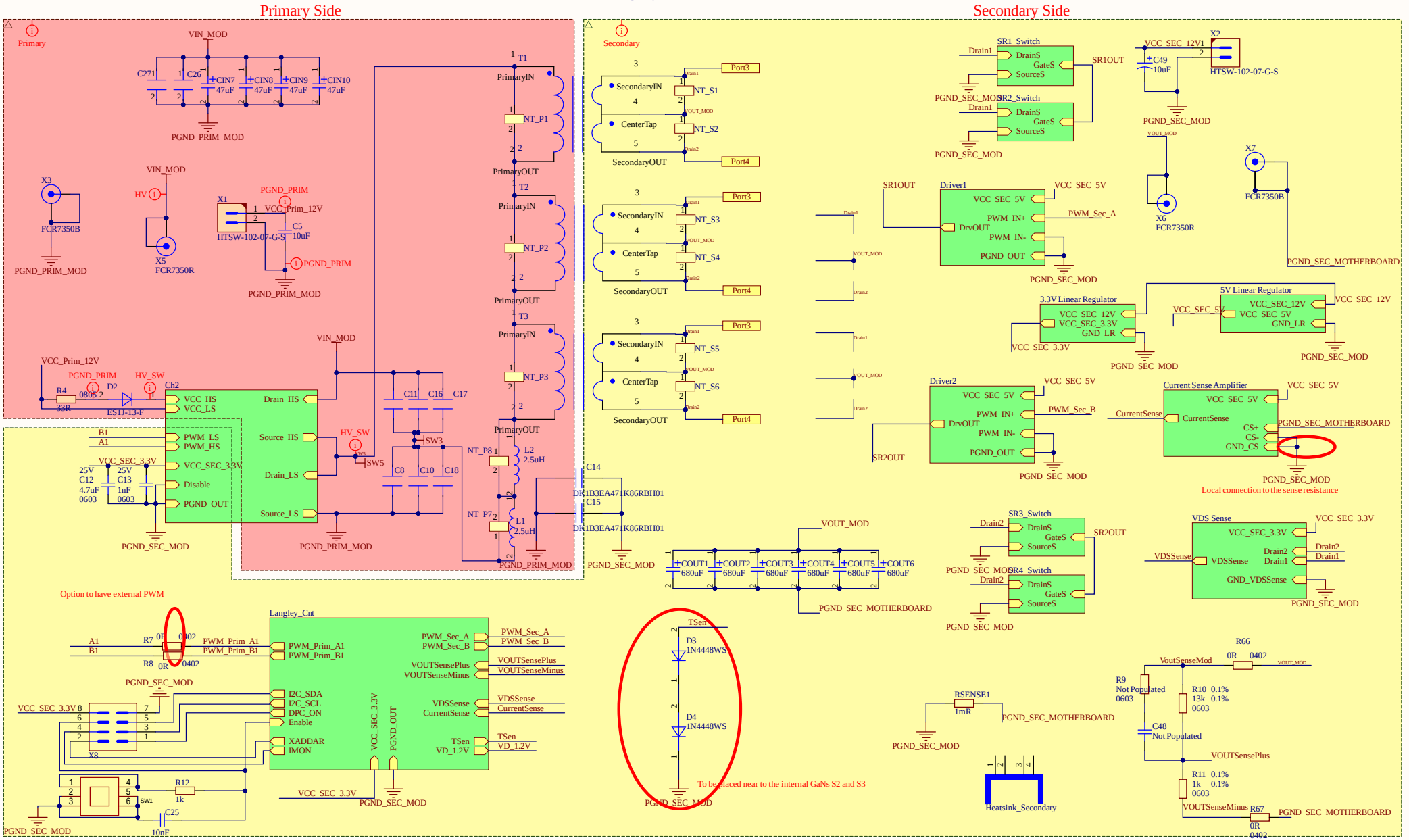

HB_LLC_Controller.SchDoc

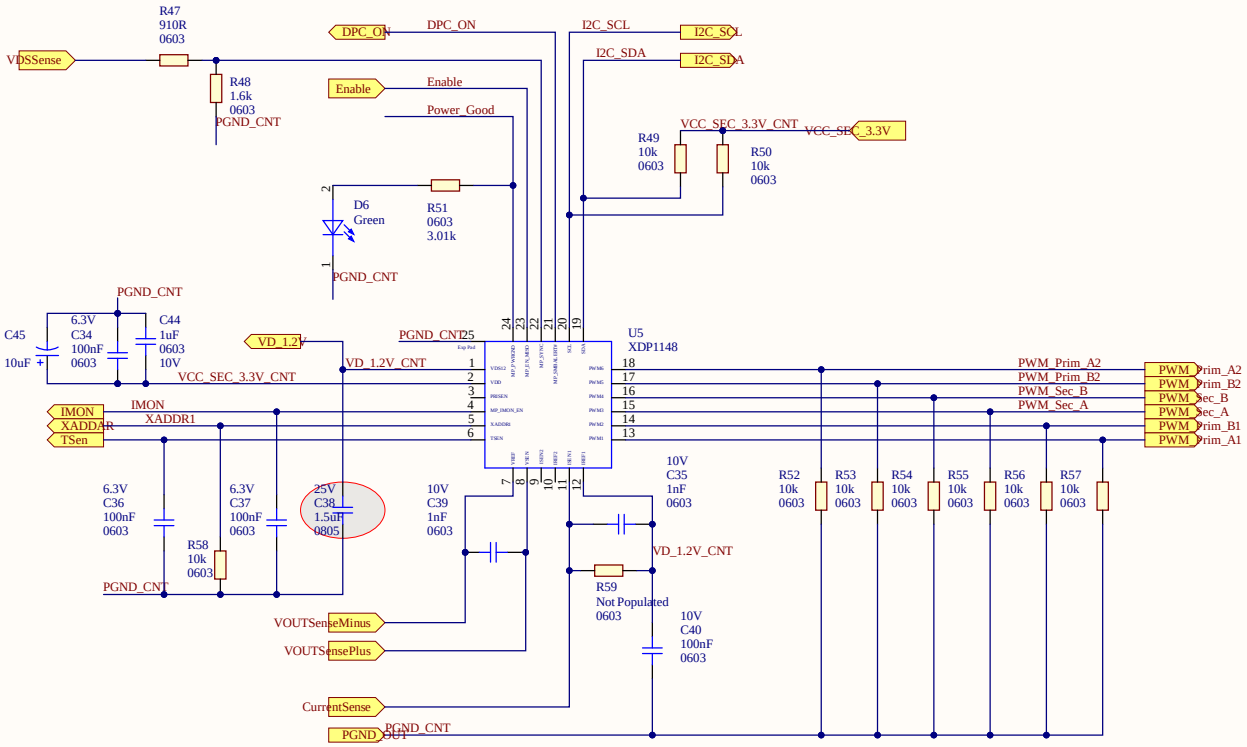

Langley

AE Team

Title	500W_LLC_Converter		
Variant	[No Variations]	Approved by	*
Size: A3	Document Name: HB_LLC_Controller.SchDoc		Rev.: 0.0
Author: Li Stephen			
Date: 12/4/2024	Time: 1:54:13 PM	SVN Revision:	Not in version control
		Sheet	of

PrimaryPowerStage.SchDoc

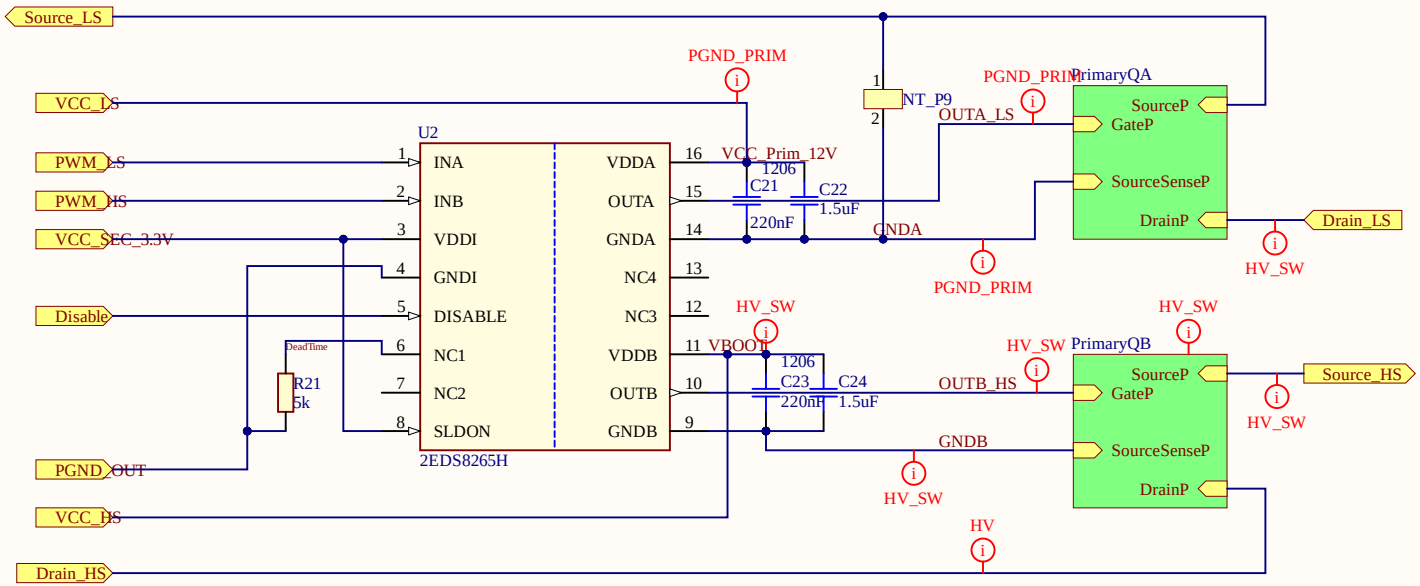

Quick-reference guide to driving CoolGaN™ GIT
Driving CoolGaN™ 600 V high electron mobility
Isolated gate driving solutions
Using the EiceDRIVER™ 2EDi product family of dual-channel functional and reinforced isolated MOSFET gate drivers
EiceDRIVER™ 2EDi product family

AE Team

Title	500W_LLC_Converter	
Variant	[No Variations]	Approved by *
Size: A4	Document Name: PrimaryPowerStage.SchDoc	Rev. 0.0
Author: Li Stephen		
Date: 12/4/2024 Time: 1:54:13 PM	SVN Revision: Not in version control	
	Sheet of	

PrimarySideSwitch.SchDoc

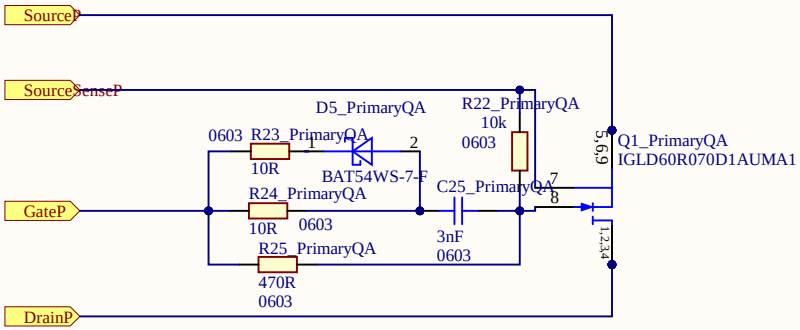

AE Team

Title	500W_LLC_Converter		
Variant	[No Variations]	Approved by	*
Size: A4	Document Name: PrimarySideSwitch.SchDoc		Rev.: 0.0
Author: Li Stephen			
Date: 12/4/2024	Time: 1:54:13 PM	SVN Revision: Not in version control	
		Sheet	of

PrimarySideSwitch.SchDoc

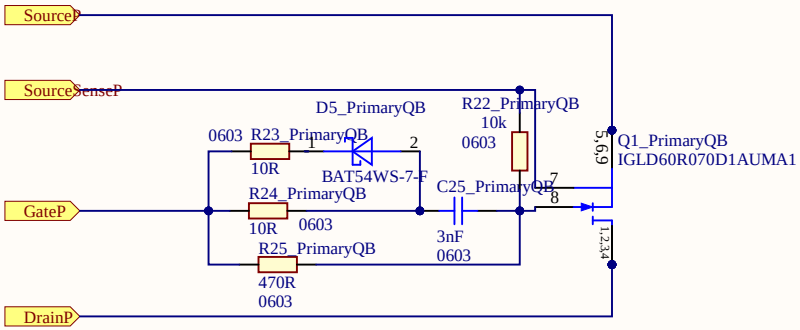

AE Team

Title	500W_LLC_Converter		
Variant	[No Variations]	Approved by	*
Size: A4	Document Name: PrimarySideSwitch.SchDoc		Rev.: 0.0
Author: Li Stephen			
Date: 12/4/2024	Time: 1:54:13 PM	SVN Revision: Not in version control	
		Sheet	of

SecondarySideSwitch.SchDoc

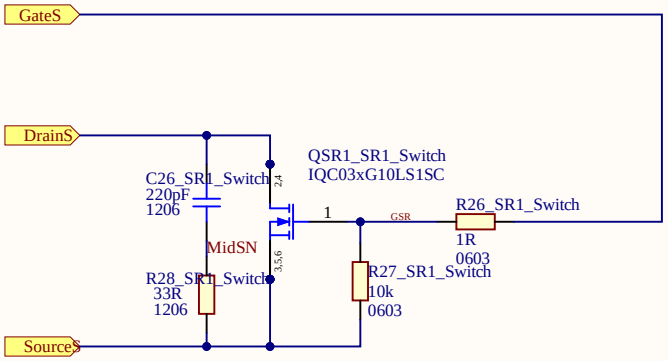

AE Team

Title	500W_LLC_Converter	
Variant	[No Variations]	Approved by *
Size: A4	Document Name: SecondarySideSwitch.SchDoc	Rev.: 0.0
Author: Li Stephen		
Date: 12/4/2024 Time: 1:54:13 PM	SVN Revision: Not in version control	
	Sheet of	

SecondarySideSwitch.SchDoc

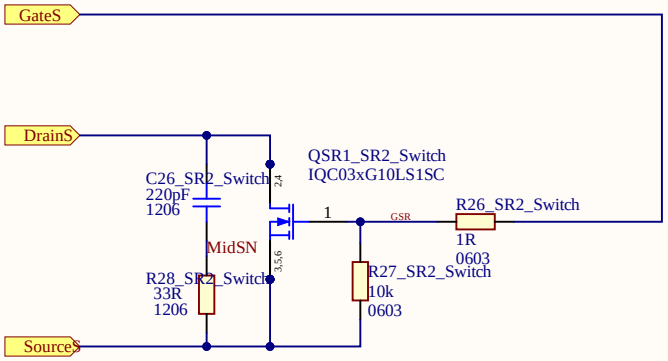

AE Team

Title	500W_LLC_Converter	
Variant	[No Variations]	Approved by *
Size: A4	Document Name: SecondarySideSwitch.SchDoc	Rev.: 0.0
Author: Li Stephen		
Date: 12/4/2024 Time: 1:54:13 PM	SVN Revision: Not in version control	
	Sheet of	

SecondarySideSwitch.SchDoc

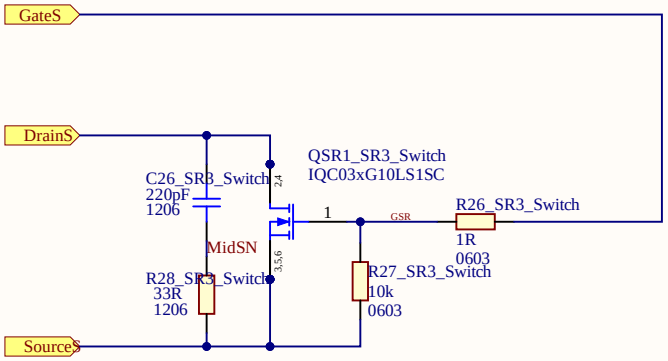

AE Team

Title	500W_LLC_Converter		
Variant	[No Variations]	Approved by	*
Size: A4	Document Name SecondarySideSwitch.SchDoc		Rev. 0.0
Author: Li Stephen			
Date: 12/4/2024	Time: 1:54:13 PM	SVN Revision: Not in version control	
		Sheet	of

SecondarySideSwitch.SchDoc

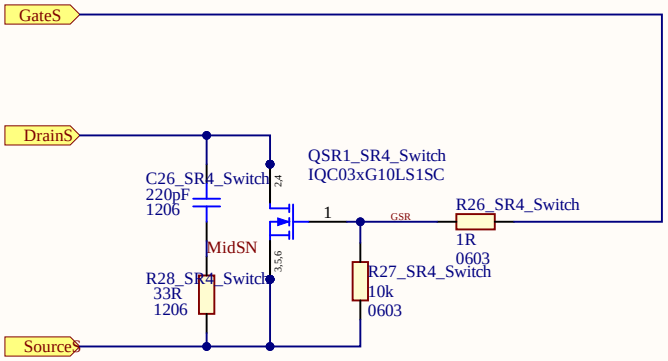

AE Team			
Title	500W_LLC_Converter		
Variant	[No Variations]	Approved by	*
Size: A4	Document Name: SecondarySideSwitch.SchDoc		Rev.: 0.0
Author: Li Stephen			
Date: 12/4/2024	Time: 1:54:13 PM	SVN Revision: Not in version control	
		Sheet	of

SecSideDriver.SchDoc

Product portfolio

Part number	Peak source/sink current	Input pulse blanking time	Package
1EDN7116U	2.0 A	20 ns	PG-TSNP-7
1EDN7126U	1.5 A	40 ns	PG-TSNP-7
1EDN7136U	1.0 A	60 ns	PG-TSNP-7
1EDN7146U	0.5 A	80 ns	PG-TSNP-7

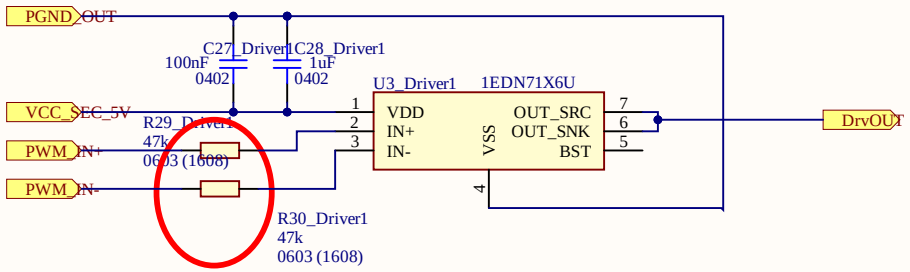

can be changed to 0402 in final design

1EDN71x6 DS

Table 10 Examples for selected input resistors

Maximum dc bus voltage	Logic voltage	Duty ratio	TDI input resistance	Resistor tolerance	Minimum Rin power rating
60 V	3.3 V	0.25	47 kΩ	0.1%	0.02 W
60 V	5 V	0.25	75 kΩ	0.1%	0.01 W
80 V	3.3 V	0.75	47 kΩ	0.1%	0.10 W
80 V	5 V	0.75	75 kΩ	0.1%	0.06 W

AE Team

Title	500W_LLC_Converter		
Variant	[No Variations]	Approved by	*
Size: A4	Document Name: SecSideDriver.SchDoc		Rev. 0.0
Author: Li Stephen			
Date: 12/4/2024	Time: 1:54:13 PM	SVN Revision: Not in version control	
		Sheet	of

SecSideDriver.SchDoc

Product portfolio

Part number	Peak source/sink current	Input pulse blanking time	Package
1EDN7116U	2.0 A	20 ns	PG-TSNP-7
1EDN7126U	1.5 A	40 ns	PG-TSNP-7
1EDN7136U	1.0 A	60 ns	PG-TSNP-7
1EDN7146U	0.5 A	80 ns	PG-TSNP-7

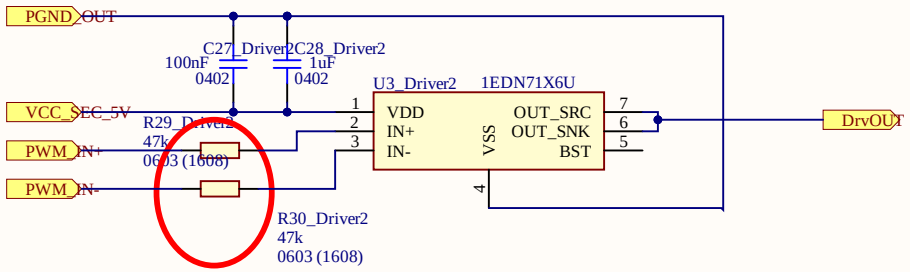

can be changed to 0402 in final design

1EDN71x6 DS

Table 10 Examples for selected input resistors

Maximum dc bus voltage	Logic voltage	Duty ratio	TDI input resistance	Resistor tolerance	Minimum Rin power rating
60 V	3.3 V	0.25	47 kΩ	0.1%	0.02 W
60 V	5 V	0.25	75 kΩ	0.1%	0.01 W
80 V	3.3 V	0.75	47 kΩ	0.1%	0.10 W
80 V	5 V	0.75	75 kΩ	0.1%	0.06 W

AE Team

Title	500W_LLC_Converter	
Variant	[No Variations]	Approved by *
Size: A4	Document Name SecSideDriver.SchDoc	Rev. 0.0
Author: Li Stephen		
Date: 12/4/2024 Time: 1:54:13 PM	SVN Revision: Not in version control	
	Sheet of	

CurrentSenseAmplifier.SchDoc

Current Sense Amplifier

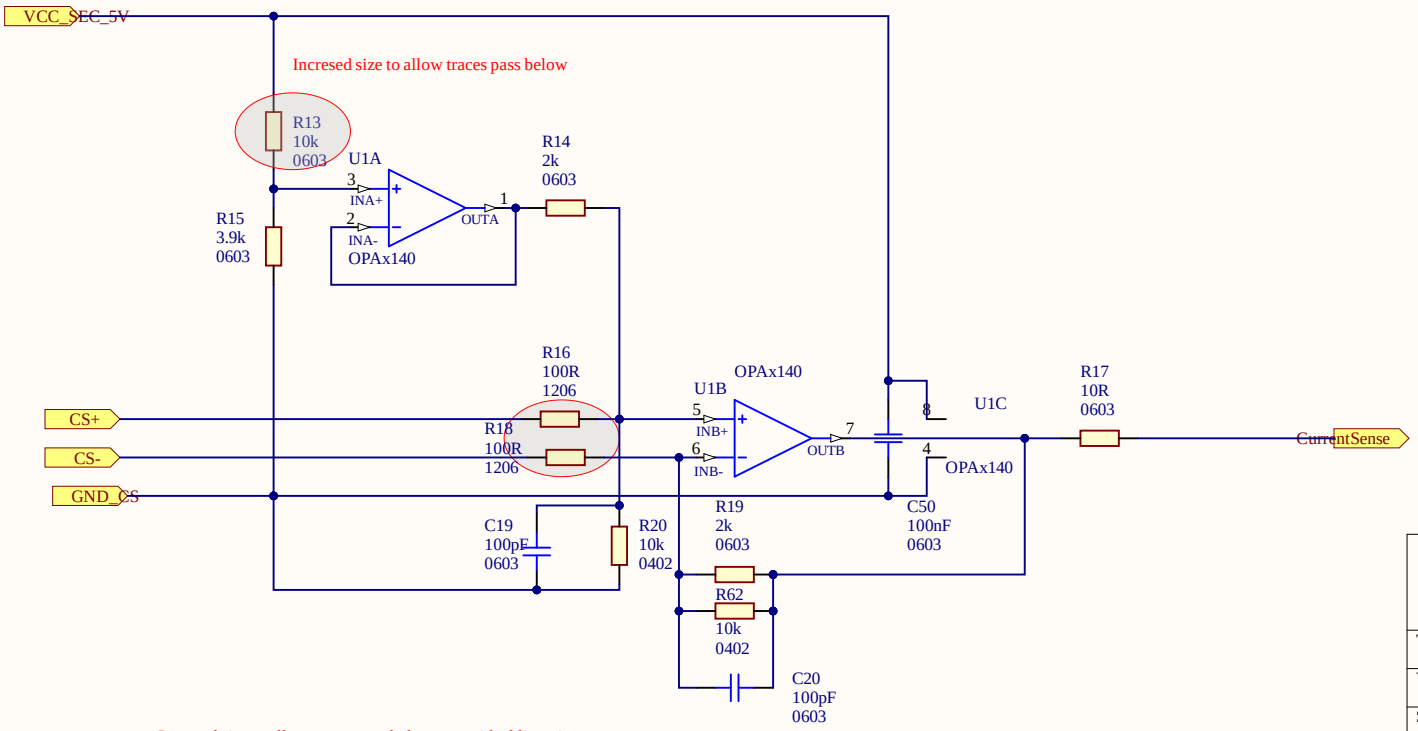

AE Team

Title	500W_LLC_Converter		
Variant	[No Variations]	Approved by	*
Size: A4	Document Name: CurrentSenseAmplifier.SchDoc		Rev. 0.0
Author: Li Stephen			
Date: 12/4/2024	Time: 1:54:13 PM	SVN Revision: Not in version control	
		Sheet	of

VDSSense.SchDoc

VDS Sensing

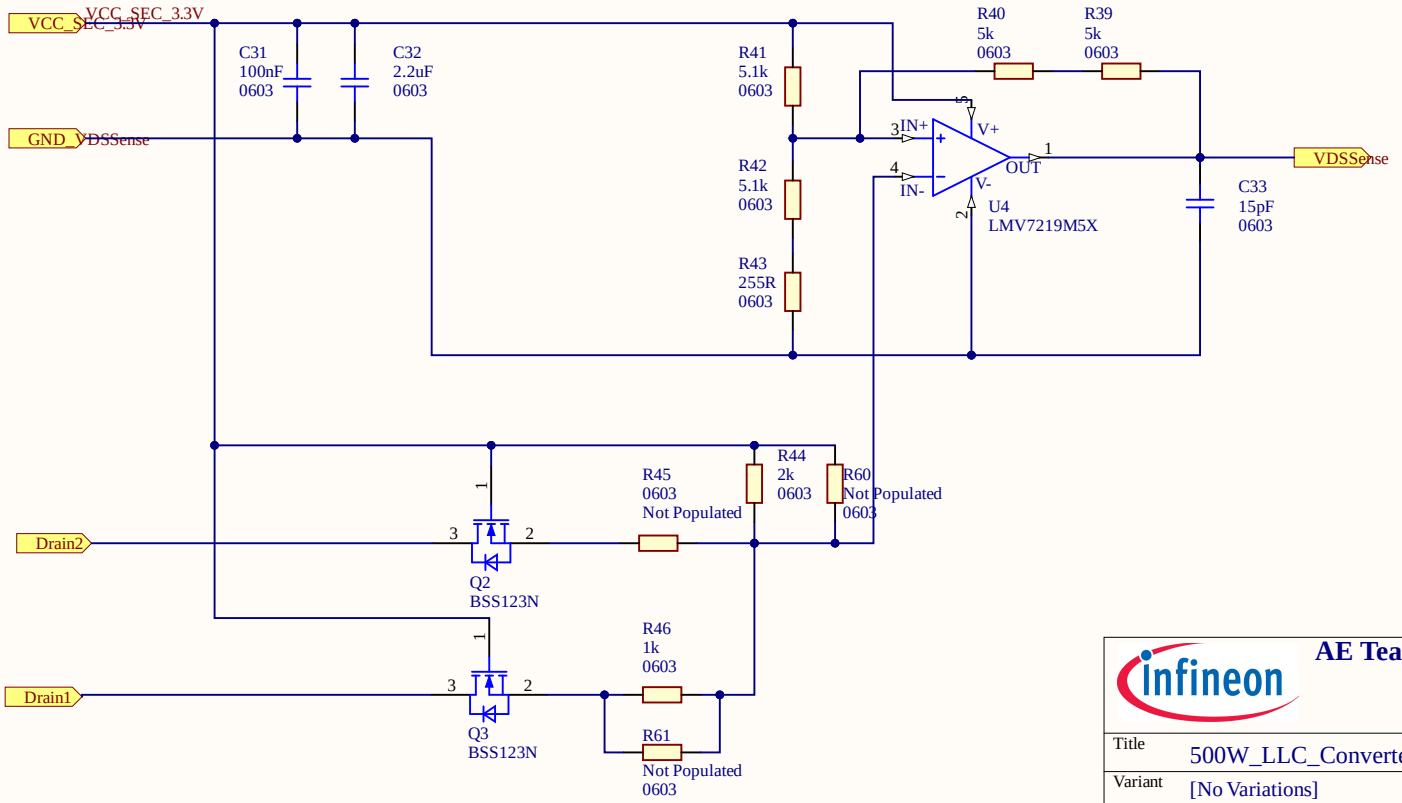

AE Team		
Title	500W_LLC_Converter	
Variant	[No Variations]	Approved by *
Size: A4	Document Name VDSSense.SchDoc	Rev. 0.0
Author: Li Stephen		
Date: 12/4/2024 Time: 1:54:13 PM	SVN Revision: Not in version control	
	Sheet of	

5VLinearRegulator.SchDoc

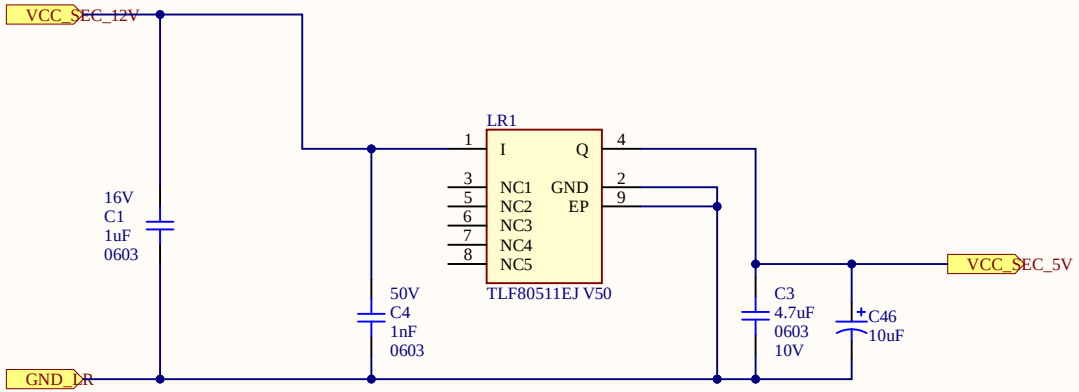

5V linear Regulator

AE Team			
Title	500W_LLC_Converter		
Variant	[No Variations]	Approved by	*
Size: A4	Document Name: 5VLinearRegulator.SchDoc		Rev.: 0.0
Author: Li Stephen			
Date: 12/4/2024 Time: 1:54:14 PM		SVN Revision: Not in version control	
		Sheet	of

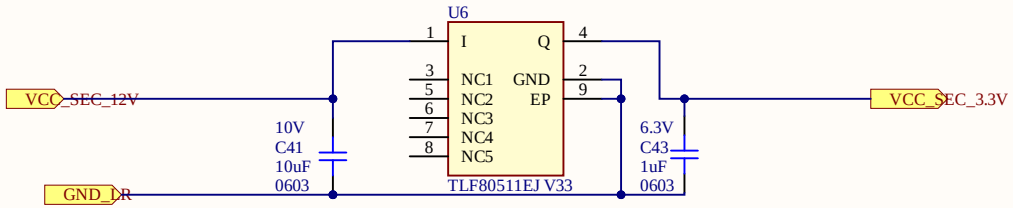

3.3V Bias for XDPP1148

Title			
Size: A4	Number		Revision
Date:	12/04/2024	Sheet of	
File:	C:\Users\..\3.3VLinearRegulator.SchDoc	Drawn By:	